MegaSquirt and getting started

By Peter Florance – PF Tuning
and
Andy Whittle

Some recent PF Tuning projects

Birken Lotus 7 clone
MS1Extra Alpha-N

Volvo 240 ITB – MS1Extra Speed Density

BMW 325is (D Street-Prepared) MS2Extra 2.1.0 Speed Density

Photo by Chris Przepiora.

1993 SM2 Turbo Miata w/ MiataPNP - MS2Extra

Photo by Mike Powers.

Decision Time

- *Think about what problem you are solving by building this system. The answer to above will help you decide everything else below*
- Fuel, ignition or both
  - Fuel-only easier for newbies.
- Injection Method
  - Single point injection (throttle body).
  - Multi port (individual injectors).

Trigger Decisions

- Trigger Method
  - Distributor, Generic Toothed Wheel, OEM Wheel or CAS
- Trigger Sensor type
  - Points, hall, optical
  - VR

Code Decisions

- Choose a code and or platform
  - MS1- B&G
    - Runs on MS1 chip. Fuel only
  - MS1 Extra
    - Runs on MS1 chip. Spark, fuel and extras
  - MS2
    - Runs on MS2 Daughterboard and and soon Microsquirt.
  - MS2 extra –
    - Runs on MS2 Daughterboard (and Microsquirt?)
  - MS3

Packaging

- V2.2
- V3.0
- V3.57
- Microsquirt
- MiataPNP
- Spectre EMSPro

Sensor Decisions

- O2 Sensors
  - Wideband
    - Accurate at wide range of AFR's
    - More expensive than narrow-band and can be finicky
    - A must for forced induction; desirable performance applications
  - Narrow-band
    - Cheap, probably came with your car
    - Only accurate at 14.7:1 otherwise only reads richer and leaner

Sensor Decisions, continued

- Coolant Temp Sensor
  - OEM with pull-up resistor
  - OEM with Easytherm
  - GM (works with all codes)*
- Manifold Air Temp Sensor
  - OEM with Easytherm
  - GM (works with all codes)*

* GM sensors are *Best for newbies; MS2 has thermistor tables so any known thermistor should be useable.*

GM Temperature Sensor Resistance

Degrees F	Degrees C	Ohms
-40°	-40	100,700
0°	-18	25,000
20°	-7	13,500
40°	4	7,500
70°	21	3,400
100°	38	1,800
160°	71	450
210°	99	185

More sensors

- Throttle Position Sensor
  - Careful, many throttle switches look like sensors
- Map Sensors
  - 250kpa – standard on V3.0 V2.2
  - 300kpa and 400kpa - optional

What to get

- Purchase a stim.
  - The only way to learn the code and the tuning – your car is not a stim!
- Timing Light
  - A must for ignition setup; old non adjustable type works best with wasted spark
- Fuel Pressure Gauge (consider extending with hose to be viewable from passenger compartment during test.
- Voltmeter with audible continuity check
  - 12V test light also useful
- Laptop with serial port
  - Careful with USB adapters; check sticky list on MSEFI

Wiring tools and bits

- Wire, harness or plug and play solution
- Strippers
  - Get proper type for stranded wire
- Heatshrink tubing
- No electrical tape or wire nuts
- Consider gasketed connectors like Weatherpak or similar

More wiring bits

- Zip Ties
  - Cut with flush cuts
- Crimp Terminals and tooling
  - Brand names are best: 3M, AMP, Molex T&B
  - Insulation color is for sizing; not a fashion statement
    - Red 18-22 gauge; Blue 14-16 gauge; Yellow 10-12 gauge
    - Radio Shack has cool little yellow butt splices for smaller wires (smaller OD)
  - Non-insulated terminals – even smaller OD, great strength and works well with heatshrink tubing
  - Open barrel (Faston etc)
  - Get good tooling (crimper's) and learn how to use them

Howard Electronics Soldering Station Deal

- Xytronic 379 Temperature Controlled Soldering Station. $49.95 currently. www.Howardelectronics.com

- Get additional tips XYB04 XYB05
- Use 'Megasquirt discount code' for additional 5% discount

Tools continued

- Liquid rosin flux or alcohol based flux helps a beginner solder like a pro. No acid flux!
  - 63/37 solder (or lead-free if you are required but higher temp required) with rosin core flux.
  - Use the largest tip that will fit the job.
- Seam-ripper for slitting jacketed cable
- Wire markers

Research and prep

- Get dyno curves or data from similar setup if possible
  - Use for setting RPM bins and VE table generator.
- Pick Injectors
  - Use for choosing injector size (see Megamanual or check http://www.ncs-stl.com/fuel/ReqInjectors03.xls (very good for high RPM/high output applications where 'turndown' is important.
  - Tip - find injectors off motor of similar size, # off cylinders and HP
  - High/Low Impedance (Z) Injector
    - Larger and better ground and power needed for Low impedance
- Start with known running car
  - Worst case- install many engine mods and Megasquirt at the time with no step by step testing.

StimWork

- Nothing is worse than trying to troubleshoot a MegaSquirt box in a car. Do your initial testing and setup on your stim.
- Non-tuning setup to do on stim (*MS2):
  - Trigger Type, edge and initial angle estimate
  - Spark Output Polarity (avoid the funny smell in your garage)
  - Sensor Calibrations*
    - MAP
    - AFR (EGO sensor)
    - Temp Sensors (EasyTherm for MS1)
  - Turn off acceleration (throttle enrichments) and EGO correction. Turn off all extra features that are not yet tested.
  - Enable over-boost protection

Harness made of low cost Auto-parts store components

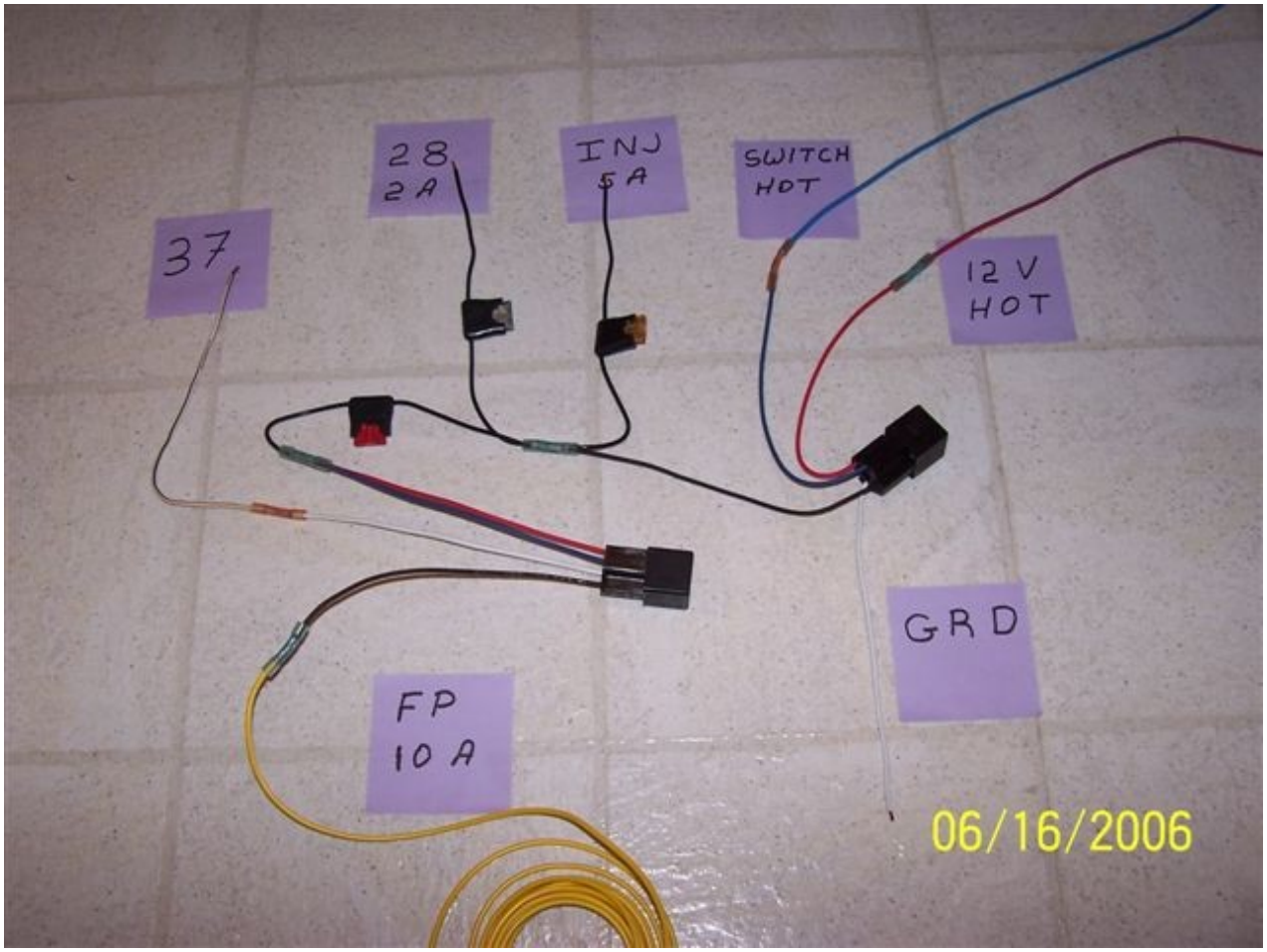

Custom engine harness for BMW

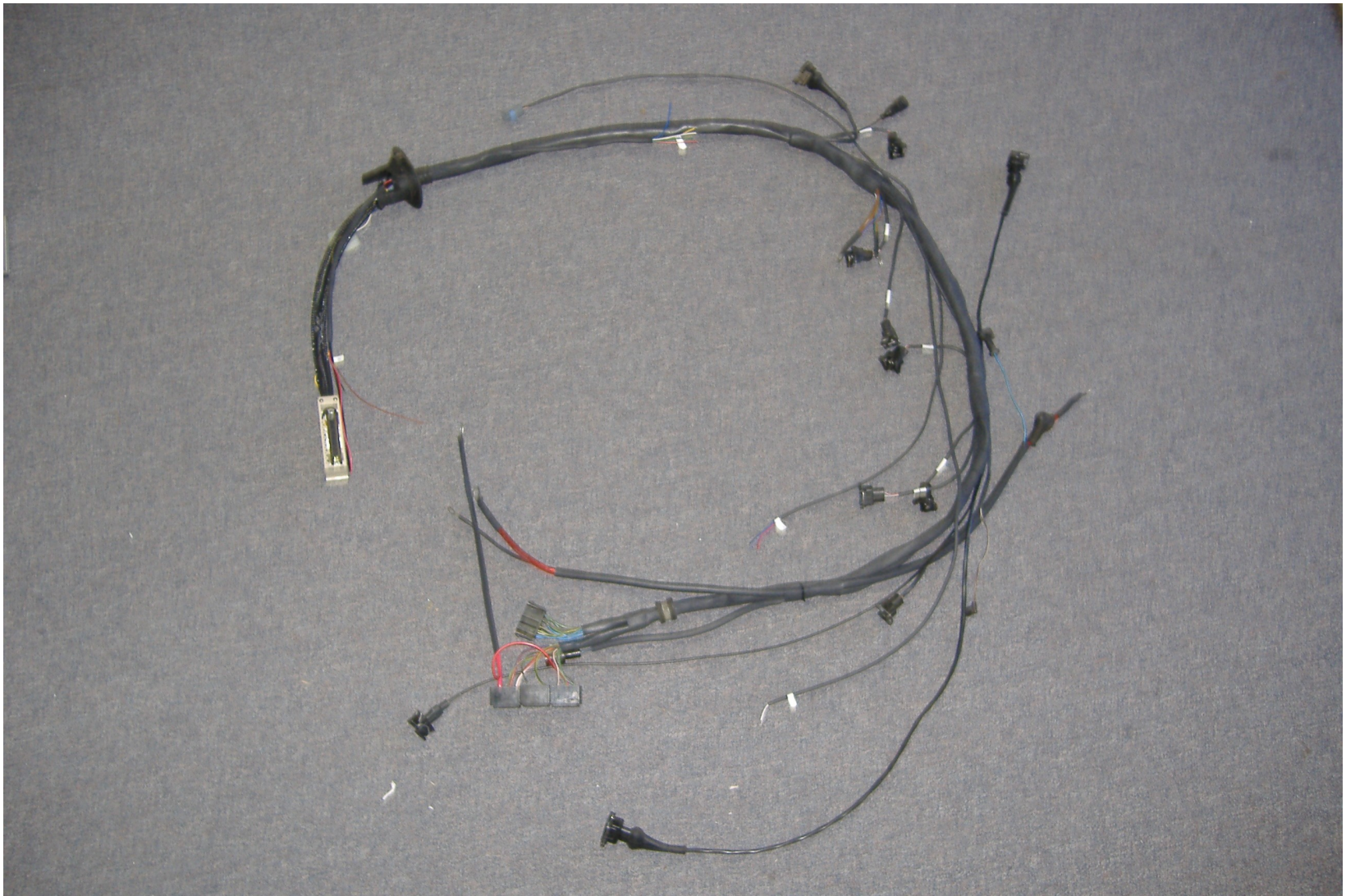

Typical Wiring Diagram

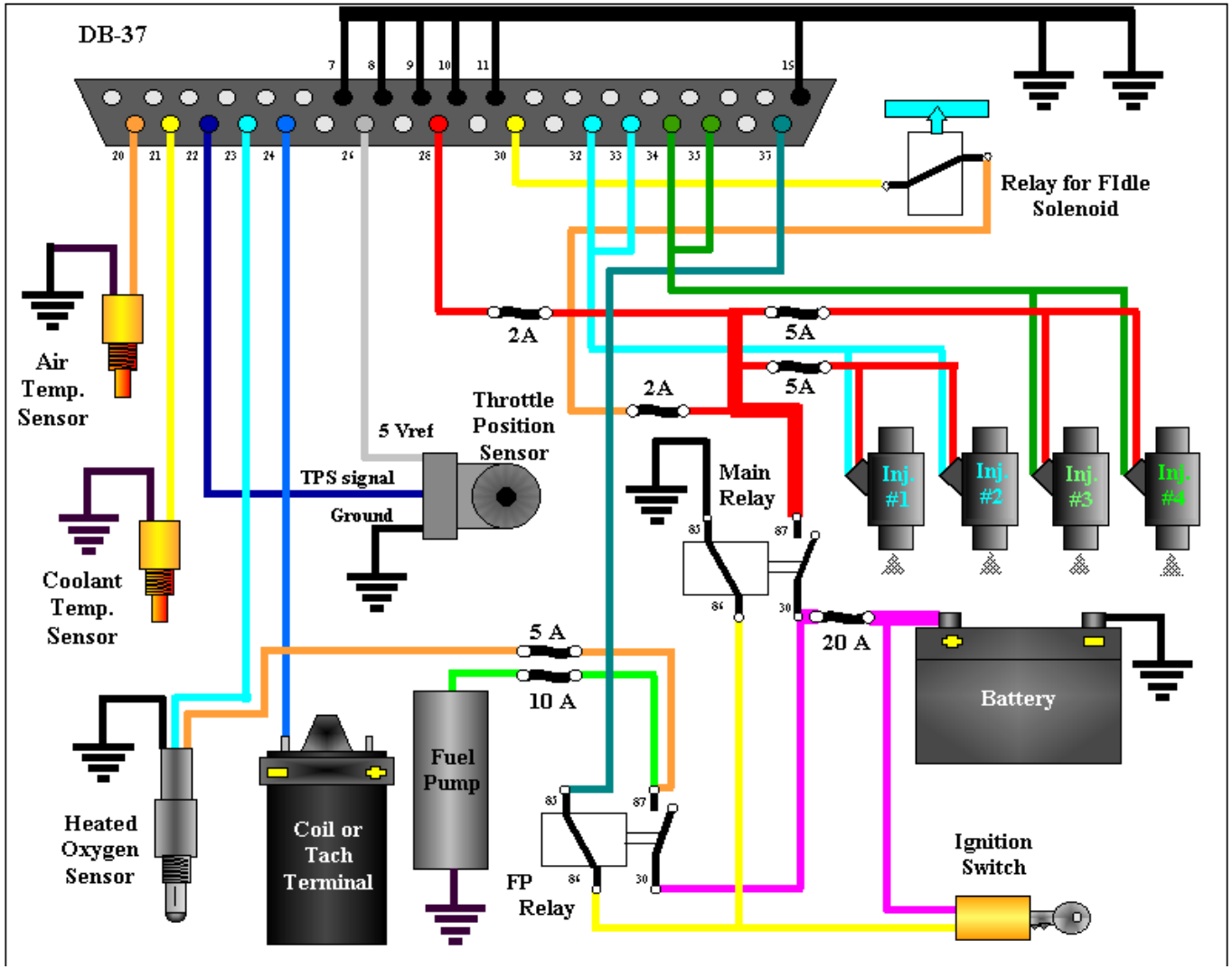

Wiring

- Clean, waterproof wiring.
  - Drip loops – loop down after grommet
  - Central and adequate power and grounds.
    - Your glove-box hinge is not an adequate ground
  - Stranded wire rated for engine compartment.
  - Correct terminals and tooling for those terminals
  - Use extra rosin flux for difficult to tin wires.
  - Do not used tinned wire in crimp connectors. Ok to solder after crimped.
- Wire colors and quality

Wideband Grounding

- Wide-band controllers have heater circuits. Many use PWM and can generate noise.
- LC1 analog and power grounds should be grounded separately to central point

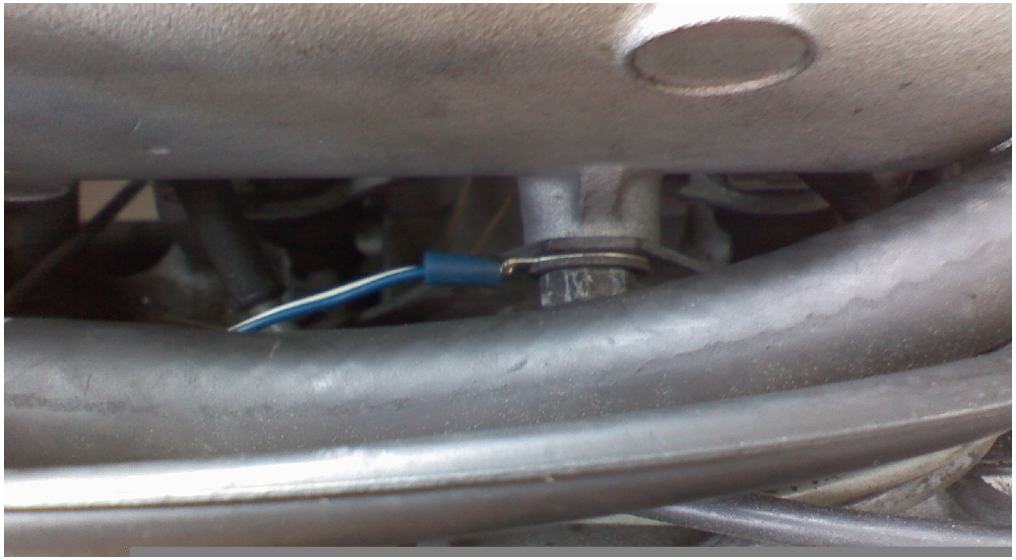

Peter’s First time wiring checklist

1. Find your wiring diagram
2. Identify timing marks and pointers. Check documentation to be sure you understand their meaning. Clean and paint with contrasting color paint.
3. Disconnect the Squirt from the DB 37 (37 pin connector)
4. Check for fixed resistance to ground on 20 21 26 (around 3500 ohms depending on temp)
5. Check for resistance to ground that increases with throttle movement on 22 about 100ohms sweeping to about 4500 ohms
6. Turn key power on
7. Check pins 28, 32-35, 36 37 (and other ignition coil connections, boost, fan or other control device pins, if used) for 12 volts power
   a) (I used meter as I was fairly confident; test-light to gnd would be better) Fidle pin 30 should be included if used.

Startup checklist continued

8. Check pins 28, 32-35, 36 37 (and other ignition coil connections, boost, fan or other control device pins, if used) again while cranking to make sure power is still there during cranking
9. Check to make sure there is no power on any other pin (test light still to gnd) Check for gnd (test light from +12v to tested pin) on pins 1-2 7-19
10. Connect Megasquirt to the DB37 and turn key on. Verify fuel pump runs and stops in two sec.
11. Connect laptop and check MAT, Coolant and TPS sensor. Datalog this process and view it with Megalogviewer

Startup checklist continued

12 Check Map Sensor

- See Table to right
- MS2; this should have been calibrated on the stim. You do have a stim, don't you?

13 Calibrate TPS in Megatune, noting Idle and WOT TPS-ADC values in your log or other documentation - you'll need these later.

Elevation Above Sea Level		Atmospheric Pressure
Feet	Meters	Kilopascals (kPa)
0	0	101.33
500	153	99.49
1000	305	97.63
1500	458	95.91
2000	610	94.19
2500	763	92.46
3000	915	90.81
3500	1068	89.15
4000	1220	87.49
4500	1373	85.91
5000	1526	84.33
6000	1831	81.22

Startup checklist, continued

13. If you have a trigger wheel and MS1 Extra, check tooth values with Megatunix Tooth Logger or TunerStudio for MS2Extra. Crank with Trigger Logger active to make sure that the trigger times are clean and even. On my installation they were except nice sine wave from compression.

First Power Up

1. Turn on switch power to power on fuel pumps, but do not start it, check for fuel leaks. Fuel pump should run and then cut off as long as you have a non-zero priming pulse value.
2. Start it, check for leaks and check Timing so that it matches what Megatune thinks the timing should be. See trigger angle to sync the Squirt to where the crank trigger wheel really ended up.
3. Check for RPM and sensor noise in the early datalogs (above). Datalog everything!
   - Posting for help? Please include datalog, msq and basic installation details.

All this, except the trigger angle, should take around one to two hours.

Trigger Wheel Diagnostics

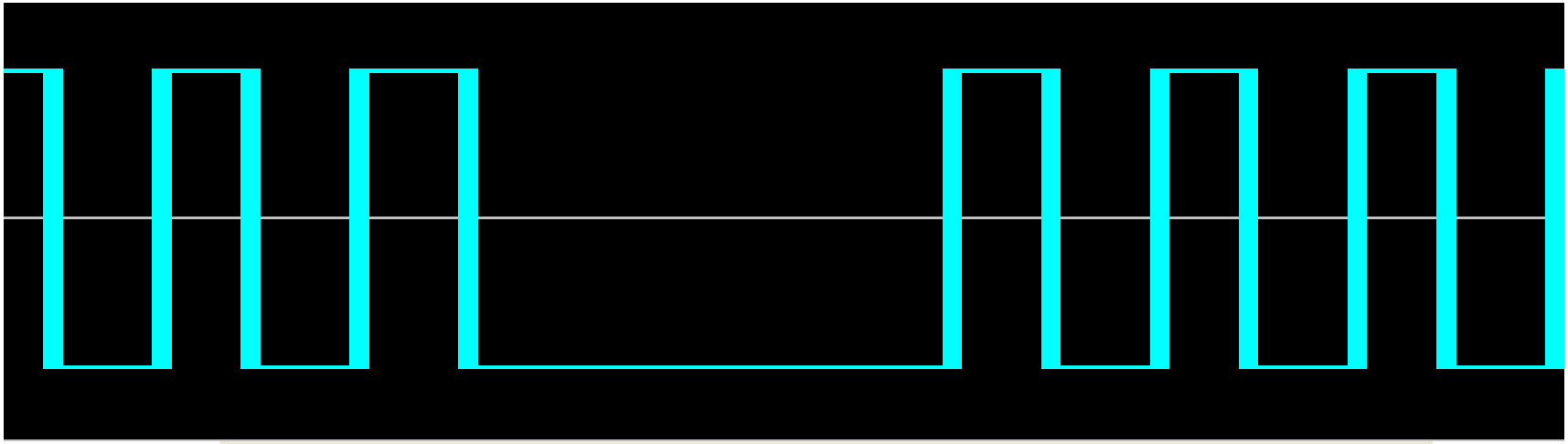

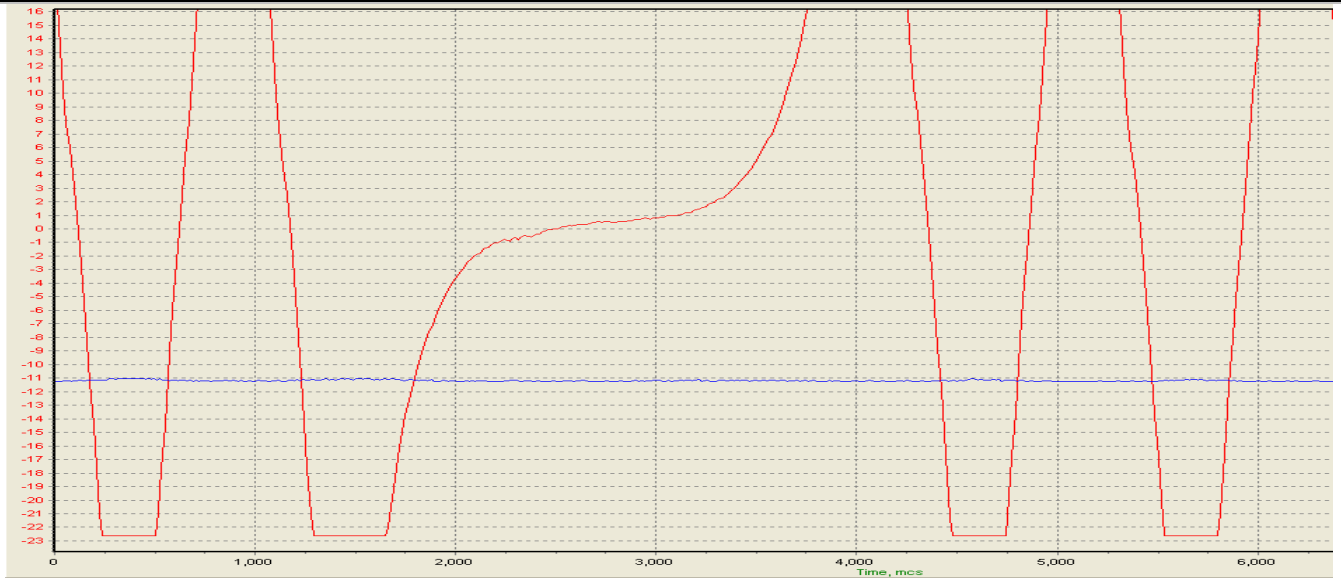

Trigger Wheel Problems

- Incorrectly VR sensor polarity or edge capture setting
- Incorrect R52 (hysteresis) R56 (threshold) adjustment. For most sensors, adjust both pots full CCW (until they click), then CW one turn.
- R52 R56 installed incorrectly so CCW means CW
- V3.0 VR input; incorrect build. Use Bill of Materials; don't use schematics, .
  - DIYAutoTune and Glen's Garage both have correct BOM's in their kits
    - **C31** - 0.001uf
    - **R44 R48 R53 R54** – 10k
    - **D24** - 1N4148

V3 VR Schematic Changes

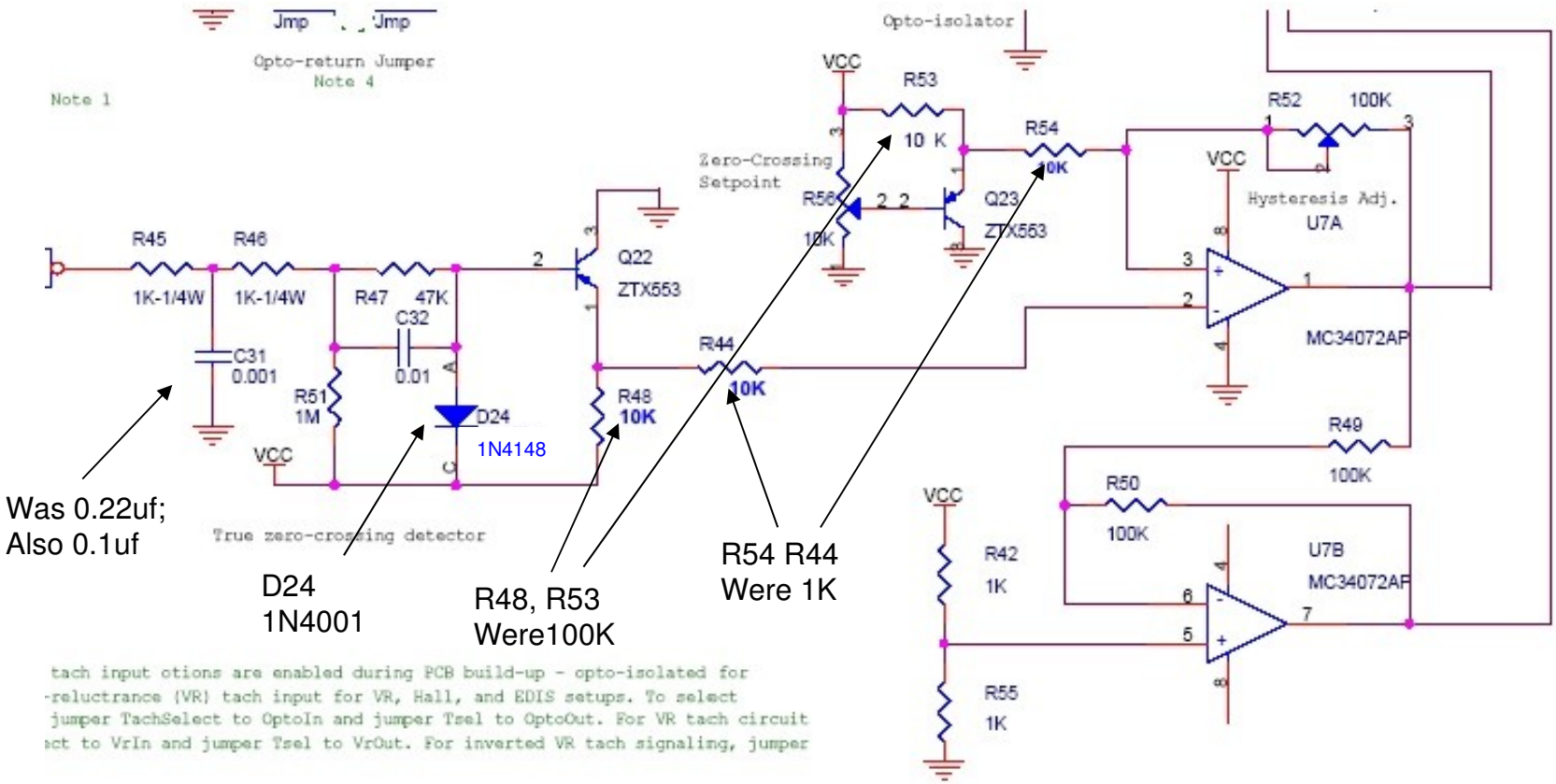

Log for correct 60-2 setup

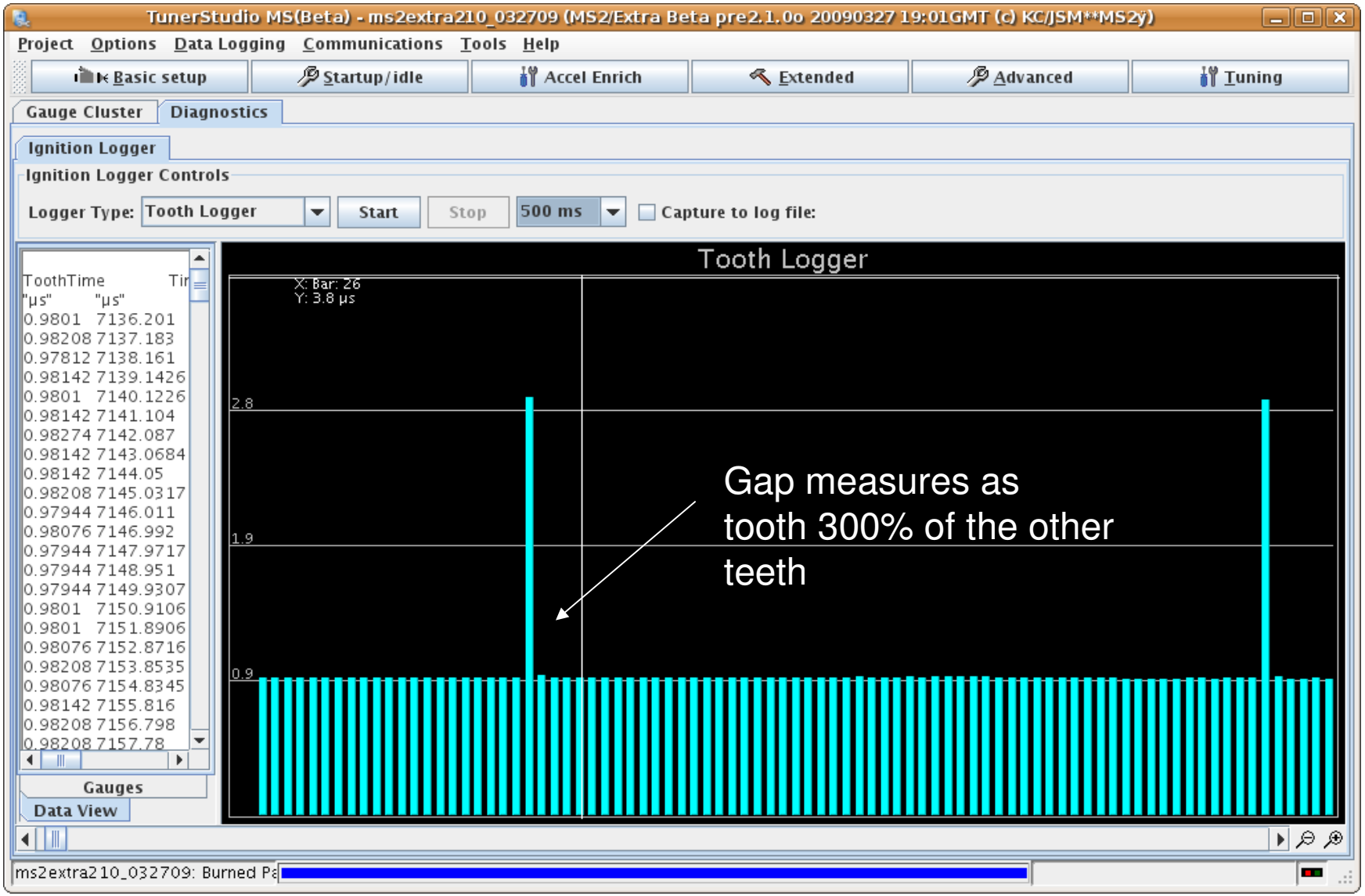

Why correct setup works

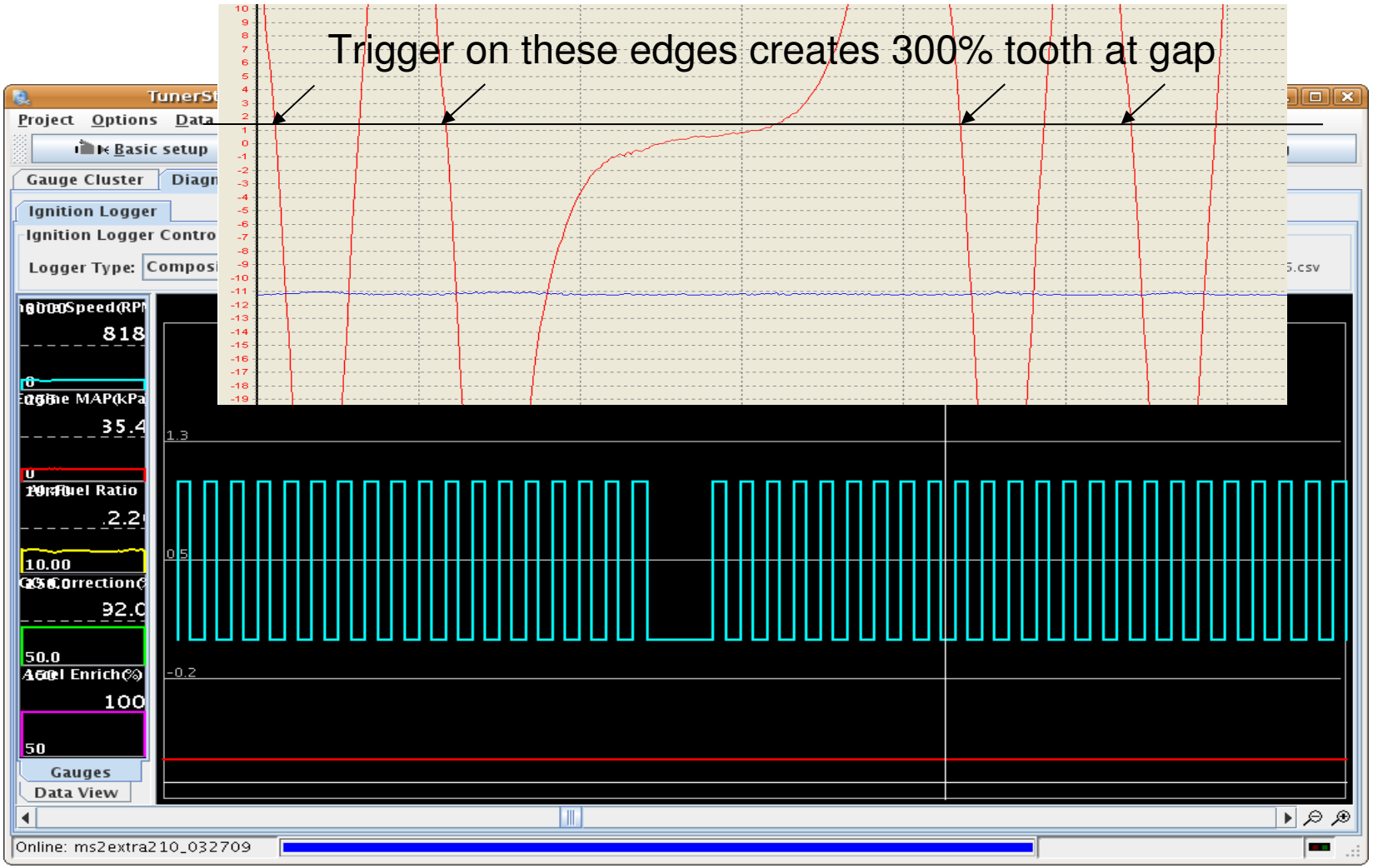

Log for incorrect 60-2 setup

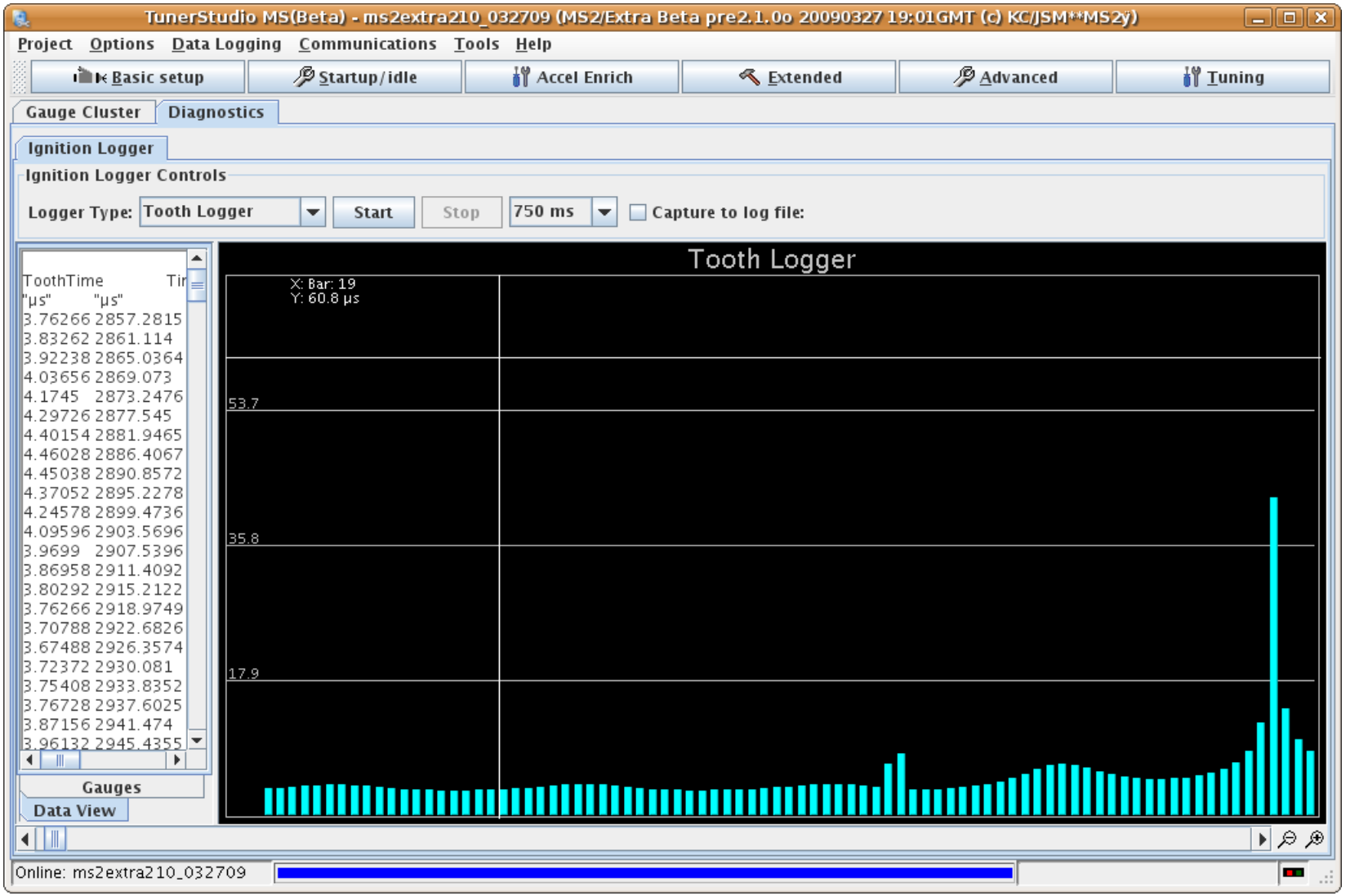

Log for incorrect 60-2 setup

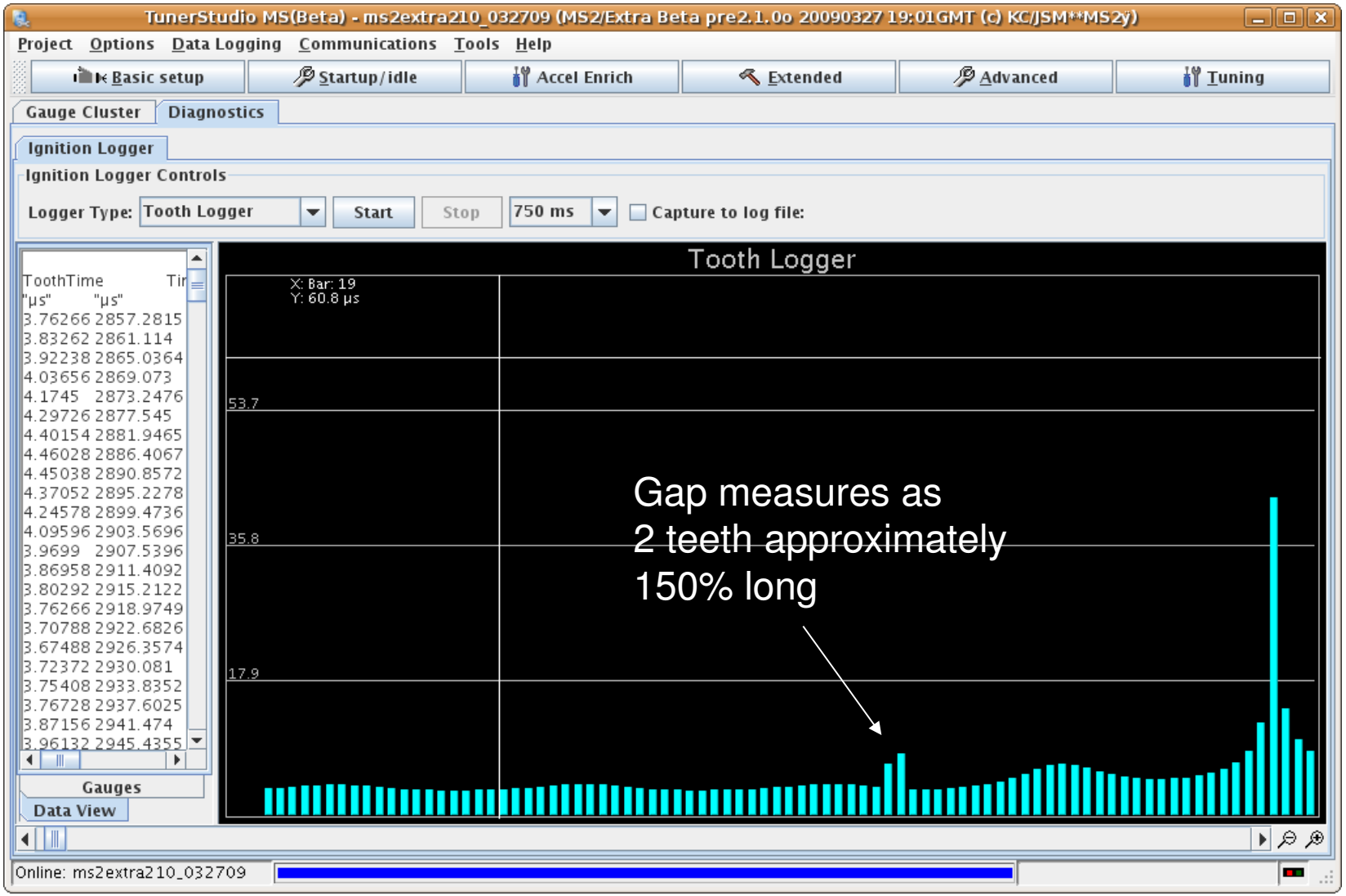

Why incorrect setup doesn't work

Why incorrect setup doesn't work

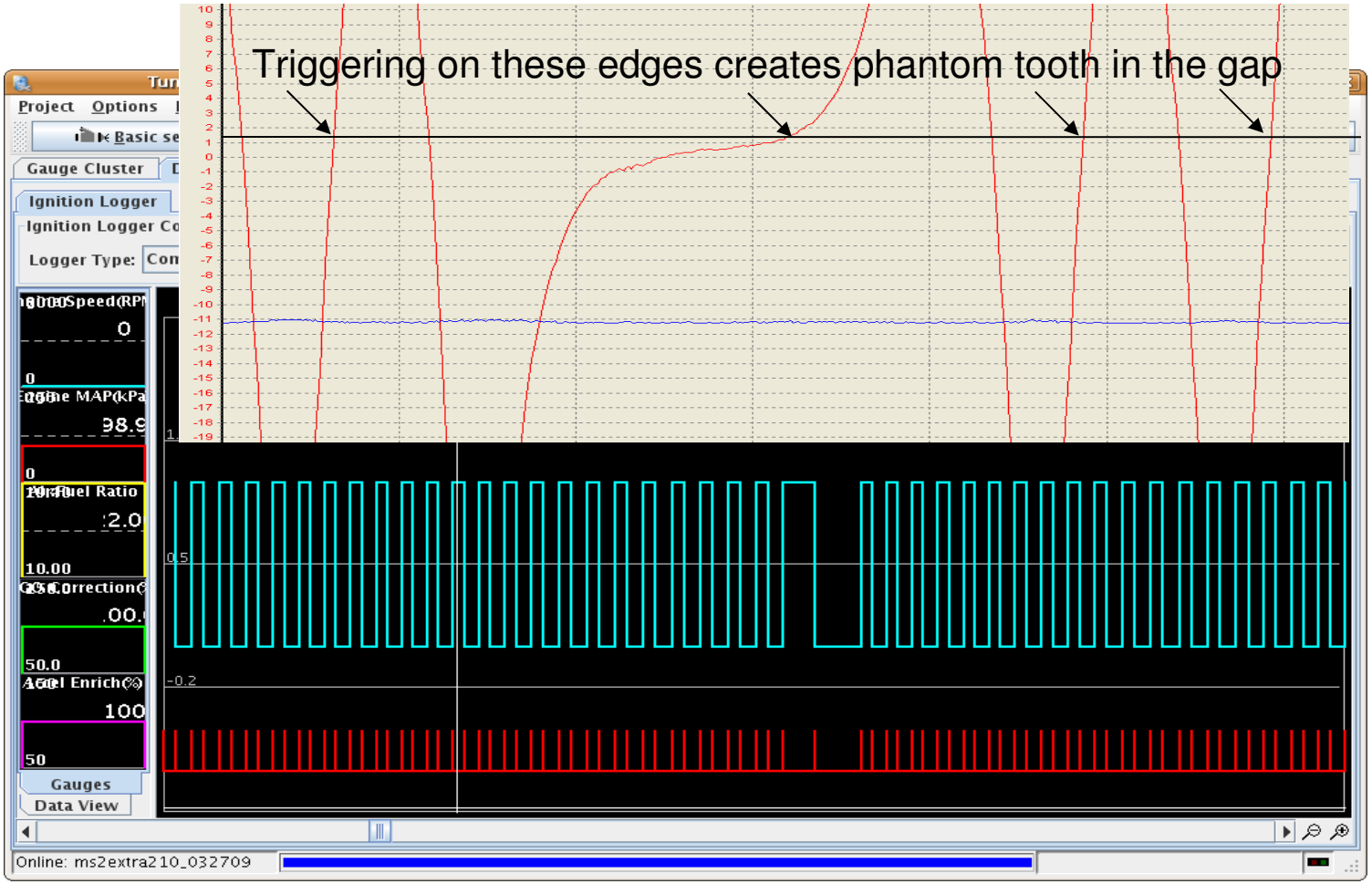

Tuning

- Speed density, Alpha-N, and MAF. How will I ever decide?
- Do I need to have target AFRs in some sort of table?
- Verify timing real early and often.
- Basic tuning early
  - Stable RPM a must! **Do not tune with a noisy RPM signal.**
  - Get VE table close before making other adjustments
- Getting it to start and a reasonable pulse width
- Backfiring on overrun, is it lean or is it rich?
- All o2 sensors get real confused with a dead miss.
- When does the motor need to start getting rich?
- Tuning for mileage? Is this the same thing?

Oh Crap! - Troubleshooting

- Some common problems
  - No RPM
    - Tach input not modified correctly or firmware not configured correctly
  - Runs very rich at idle
    - No MAP signal connected
    - Accel Enrichment mis-triggering
  - Can't tune idle – works ok during load.
    - PWM TIP125 shorted on one bank causing longer closing times
- MegaManual Troubleshooting guide

Oh Crap! - more common problems

- Starts and shuts off.
  - High impedance injectors set for low impedance
- MS stays powered up with key off.
  - Injectors or idle valve not connected to same switched +12V as MegaSquirt box

Oh Crap! - MS is intermittent!

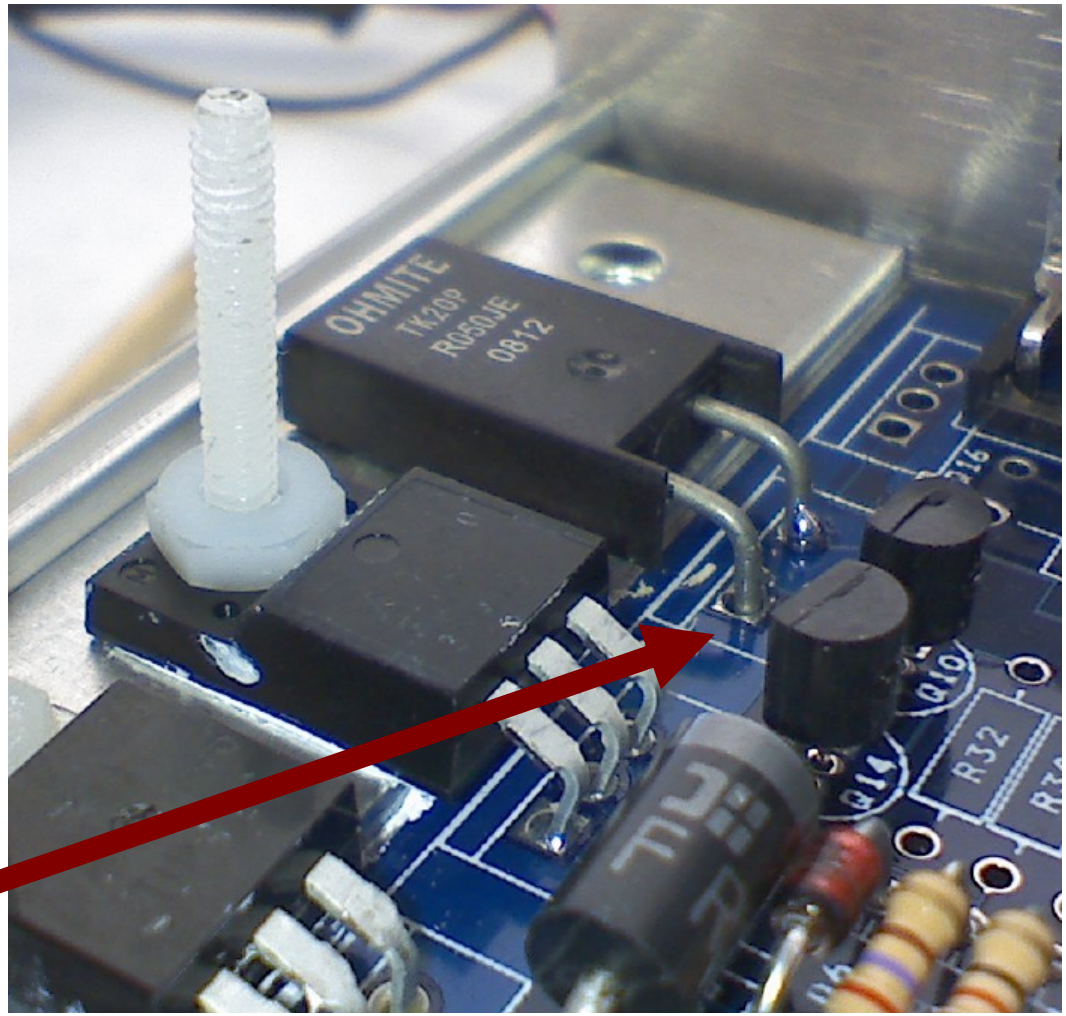

Not
Soldered

Oh Crap! - Troubleshooting

- Getting help online:
  - Post MSQ and datalog. If you don't know what these are yet, DO NOT try to start your car!
  - When testing, if you find something funny, record amount of *funny*. In other words, if a suggestion doesn't help, tell us what it *did* do.
  - You don't have to follow every suggestion given, but you risk hearing: *“Well, it sounds like you've got in under control. Let us know how it runs...”*

Oh crap! ...continued

- Remember that stim we told you to buy?
  - Test on stim to verify MS box is still good and configured.
- Repair services available
  - Peter Florance (peter@pftuning.com) and others listed on MSEFI.com
- Support also available.

Sources

- Waytek Wiring – Wire, weatherpack and other connectors, tooling, heatshrink tubing
- Caig Labs – Deoxit paste and spray
- Howard Electronics – Solder tools, solder, flux Use megasquirt code for 5% discount
- Terminal Supply Company - Wire, weatherpack and other connectors, tooling
- Sewing store – seam ripper for slitting jacketed wire.
- Ebay or Craigslist – Craftsman timing light